SHOP PRESS

Manual Version

BHP0020

Dustproof Cover

V-Blocks & 180° Guiding Design

Punches Sets Are
Standard Accessories

Special Design For More Height
Position Of Working Table

Screw Extension

Model	Capacity	A	B	C	D	E	G1	G2	R	R1	R2	M
BHP0020	20 Ton	710	540	1800	134	505	25	850	220	145	75	/

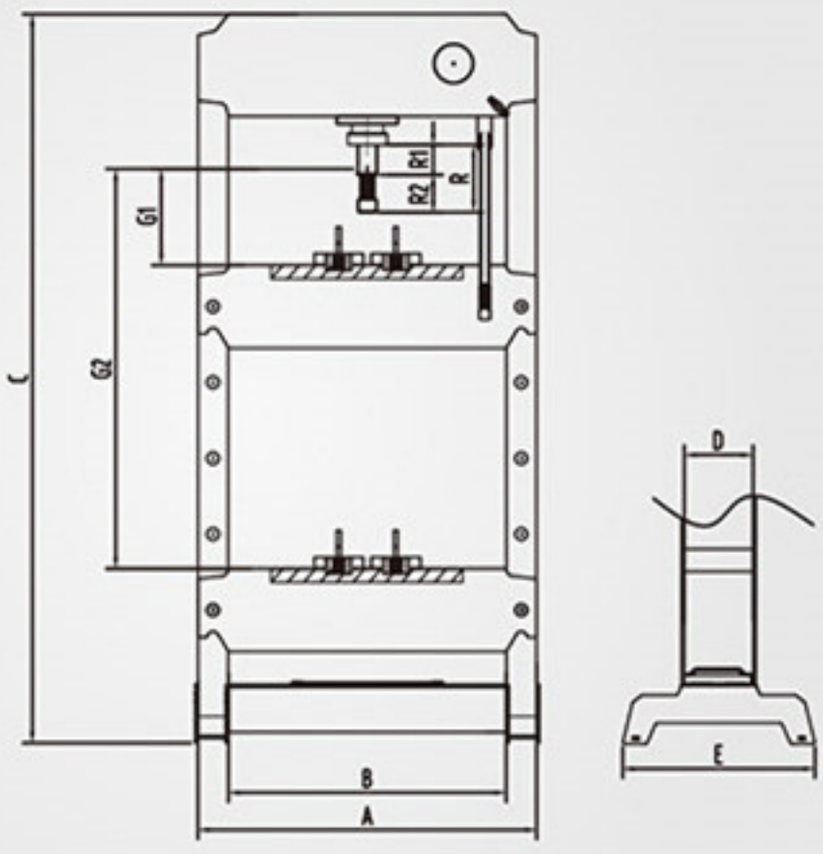

Features

- Safety Valve
- Winch with swivelling handle
- Industry seals
- Robots welding
- protection cover
- Laser cutting frame
- Removable parts tray
- Ergonomics operation handle
- Double speed pump

BUTTS OF BAWTRY
ESTABLISHED SINCE 1971