INSTRUCTIONS FOR

TRAILING ARM BUSH TOOL-VAUXHALL/OPEL

MODEL NO: **VSE4787**

Thank you for purchasing a Sealey product. Manufactured to a high standard, this product will, if used according to these instructions, and properly maintained, give you years of trouble free performance.

IMPORTANT: PLEASE READ THESE INSTRUCTIONS CAREFULLY. NOTE THE SAFE OPERATIONAL REQUIREMENTS, WARNINGS & CAUTIONS. USE THE PRODUCT CORRECTLY AND WITH CARE FOR THE PURPOSE FOR WHICH IT IS INTENDED. FAILURE TO DO SO MAY CAUSE DAMAGE AND/OR PERSONAL INJURY AND WILL INVALIDATE THE WARRANTY. KEEP THESE INSTRUCTIONS SAFE FOR FUTURE USE.

Refer to Instructions

Wear eye protection

Wear protective Gloves

1. SAFETY

- ❑ WARNING! Ensure Health and Safety, local authority and general workshop practice regulations are adhered to when using tools.
- × **DO NOT** use tools if damaged.
- × **DO NOT** use tool for purposes other than for which it is designed.
- × **DO NOT** use tool when you are tired or under the influence of alcohol, drugs or intoxicating medicines.
- ✓ Maintain tools in good and clean condition for best and safest performance.
- ✓ Ensure that a vehicle which has been jacked up is adequately supported with axle stands and that the wheels are chocked, refer to the vehicle manufacturer's service instructions, or a proprietary manual.
- ✓ Ensure that work area has adequate lighting.
- ✓ Keep children and unauthorised persons away from the work area.
- ✓ Wear approved eye protection. A full range of personal safety equipment is available from your Sealey dealer.
- ✓ Wear suitable clothing to avoid snagging. Do not wear jewellery and tie back long hair.
- × **DO NOT** use air tools to operate the force screw.
- ✓ When not in use, store tool in a safe, dry childproof area.
- ✓ **IMPORTANT:** The force screw must be kept well lubricated.
- ❑ **WARNING!** Failure to comply with these instructions may result in damage to the tool or vehicle and/or personal injury.
- ❑ **WARNING!** The warnings, cautions and instructions referred to in this manual cannot cover all possible conditions and situations that may occur. It must be understood that common sense and caution are factors which cannot be built into this product, but must be applied by the operator.
- ✓ **IMPORTANT:** This manual is provided as a guide only, refer to the vehicle manufacturer's service instructions, or a proprietary manual, to establish the current procedure and data.

2. INTRODUCTION

Suitable for the removal/installation of the rear trailing arm mounting bushes on Vauxhall/Opel vehicles. Can be used in situ without removing the arm from the vehicle. Features a slotted adaptor for visual reference while in operation. Supplied in carry case.

3. SPECIFICATION

Model No:.....VSE4787
Applications:.....Vauxhall/Opel; Astra H(04-15),
.....Zafira B(05-15), Meriva B(10on)

ITEM	DESCRIPTION
A	Large Adaptor (silver removal)
B	Small Adaptor (silver removal)
C	Force Screw (x2)
D	Flange Nut
E	Small Adaptor (black reinstall)
F	Large Adaptor (black reinstall)

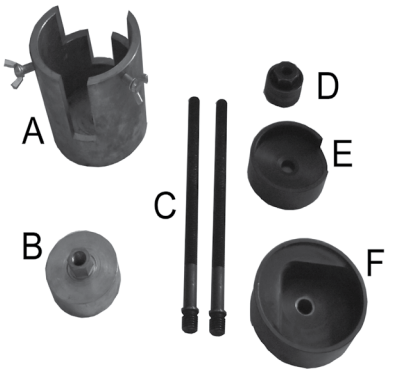

fig.1

4. OPERATION

4.1. **NOTE!** Pictures taken with the wish-bone removed from it's housing for clarity. Refer to the vehicle manufacturer's service instructions, or a proprietary manual to carry this out.

4.2. **NOTE!** This tool will insert the bush to the correct depth, but before installing the new bush, refer to the vehicle manufacturer's service instructions, or a proprietary manual, to establish the correct horizontal alignment/positioning of the bush.
IMPORTANT: This tool is designed to aid removal of the bush. We suggest that the area around the bush is thoroughly cleaned.
The threads of the tool should also be thoroughly lubricated in use.

× **DO NOT** use an Impact Socket with this tool.
Stripped threads and bent thrust cups are not accepted warranty claims on this tool.

© Jack Sealey Limited

4.3. **Removing Bush**

4.3.1. Obtain access to the bush assemble following manufactures instructions, including removing rubber washer.

4.3.2. Thread the Adaptor(B) onto the short threaded end of the force screw (C). (fig.2) Pass the bolt through the bush from the rear and then position the large Adaptor (A) over the force screw, fitting it around the bush housing.(fig.3)

4.3.3. Thread the Flange nut (D) onto the force screw and wind it up to the adaptor. Tighten wing nuts to align and hold the extraction tool in place. Double check to make sure that everything is aligned.

4.3.4. Using a 24mm spanner, turn the nut clockwise. The extractor will start to extract the bush through the housing (Fig.3). Progress can be monitored though the slot in adaptor(A)

4.3.5. Keep turning until the bush has been extracted all the way out of the housing. Take care as the bush and assembly may fall if wing nuts are not tight.

4.3.6. Loosen wing nuts and remove Bush Tool and bush,

4.3.7. Remove nut(D) pull tool a part and remove bush, dispose of bush in the appropriate manor.

4.3.8. **NOTE!** If any undue resistance is felt, remove the assembly and check everything is correctly aligned. The bush will only push out in one direction.

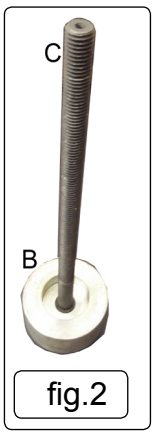

fig.2

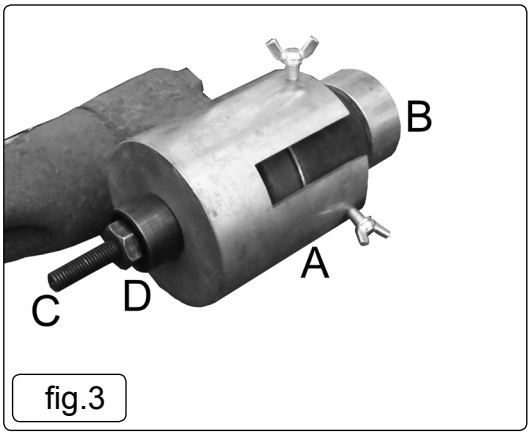

fig.3

4.4. **Installing new bush.**

4.4.1. Before installing a new bush, clean the inside of the housing.

4.4.2.. Adaptor (F) is threaded onto the short threaded end of the bolt (C).(fig.4) Pass the bolt through the housing from the rear then through the new bush and then position the Adaptor (E) over the bolt, fitting it against the bush.

4.4.3. To facilitate correct positioning of the bush, the installation adaptor (F) has a recess that aligns with the face of the new bush The bush should then be aligned in the housing. Thread the nut (D) onto the bolt and wind it up to the adaptor. Double check to make sure that everything is aligned and that the bush is sitting squarely against the housing.

4.4.4. Using a 24mm spanner, turn the nut clockwise. The bush will start to be pushed into the housing.

4.4.5. **NOTE!** If any undue resistance is felt, remove the assembly and check that everything is correctly aligned.

4.4.6. Continue to turn the nut to install the bush, when the bush reaches the housing, resistance will be felt and the bush is fully installed. (Fig.5)

4.4.7. Disassemble the tool, clean and lubricate before returning the parts to the storage case.
Re-fit rubber washer and wish-bone as per the vehicle manufacturer's service instructions or a proprietary manual.

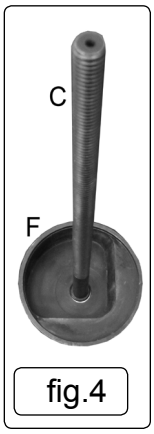

fig.4

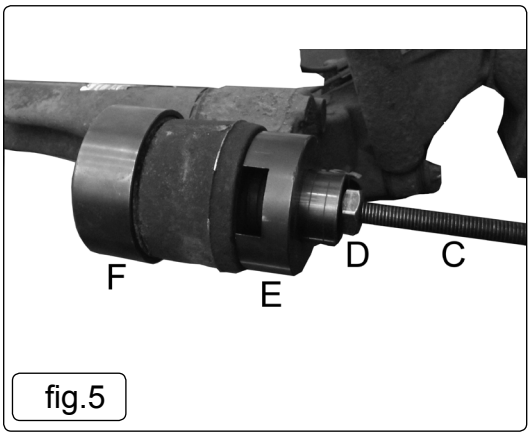

fig.5

Butts of Bawtry
Station Yard Bawtry Doncaster South Yorks DN10 6QD UK
Tel: 0044 (0)1302 710868 Fax: 0044 (0)1302 719481
Web: www.buttsofbawtry.com Email: info@buttsofbawtry.com